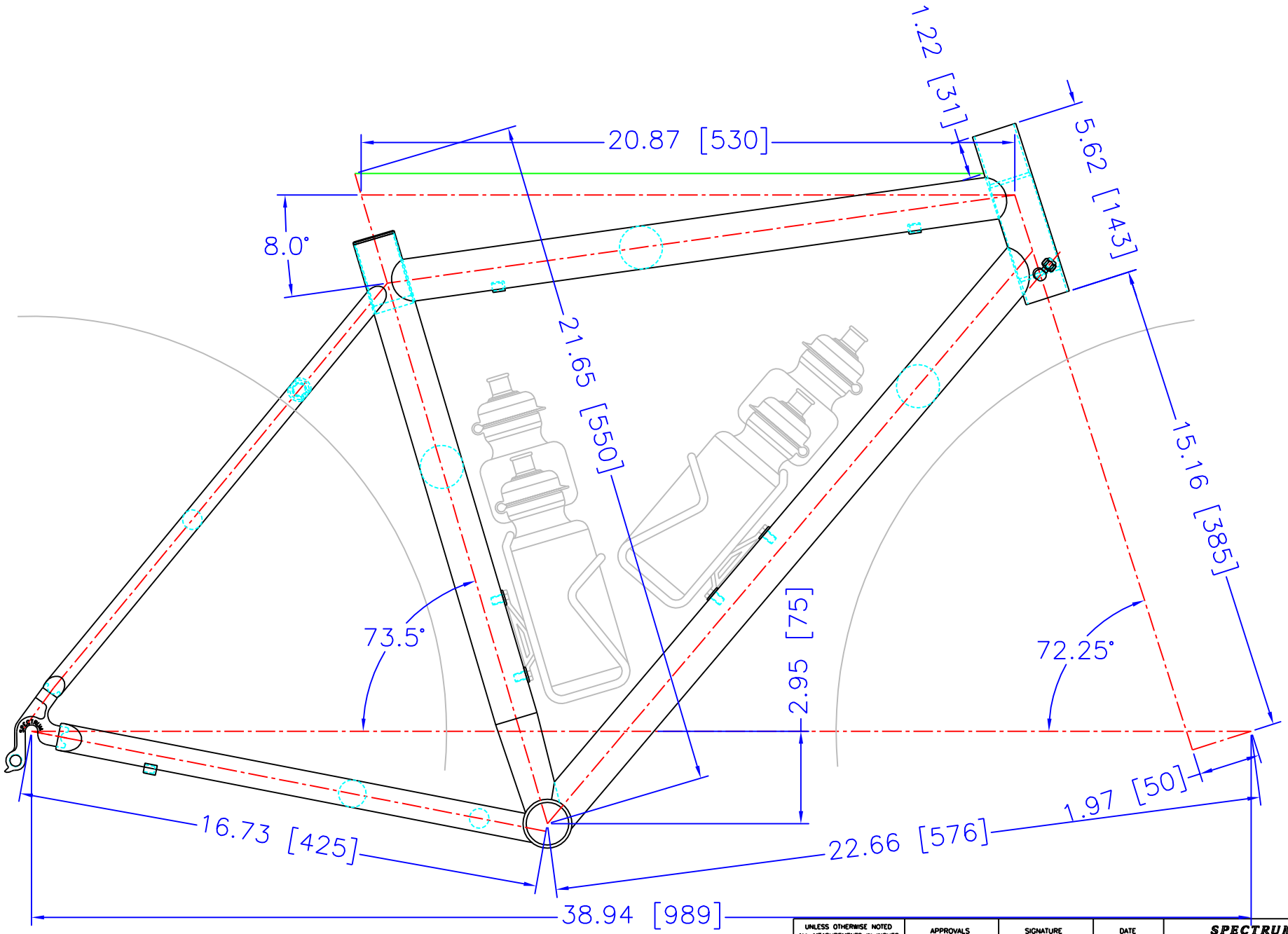

UNLESS OTHERWISE NOTED ALL MEASUREMENTS IN INCHES	APPROVALS	SIGNATURE	DATE	SPECTRUM
TOLERANCE UNLESS OTHERWISE NOTED FRACTIONAL: +/- 1/32" X DECIMAL: +/- .030" XX DECIMAL: +/- .010" XXX DECIMAL: +/- .005" ANGULAR: +/- .25'	DWN. BY J. DAY		15-MAR-2008	SPECTRUM CYCLES, TT-789 CUSTOM, C118651
	ENG			
	CHKED BY			
	QA			SIZE E · PART NO. CUSTOM · REV. 0
	MGMT			PLOT SCALE N/A · DWG NO. C118651 · SHEET 1 OF 1